FB Conversion Adapter

	Item No	Description	Outer diameter	extension length
Adapters	AZURE-ADV6.5	V38 mount to M42x1	44mm	6.5mm
	AZURE-ADVC	V38 mount to C-mount	44mm	6.5mm
	AZURE-ADVF9	V38 mount to F-mount	64.4mm	9mm
	AZURE-ADVL(Leica)	V38 mount to M39 x1/26	44mm	6.5mm
	AZURE-ADFT34.5	F mount to M42 x1	56.9mm	34.5mm
	AZURE-ADFT42	F mount to M42 x1	56.9mm	37.9mm
	AZURE-ADFM58	F mount to M58 x0.75	61mm	34.5mm
Others	AZURE-ADM58M72	M58 x0.75 to M72x0.75	75mm	2mm
	AZURE-ADM72M90	M72 x0.75 to M90x1	100mm	4mm
	AZURE-ADM90M95	M90x1 to M95x1	98mm	4mm
	AZURE-ADM72D	M72 x0.75 to Dalsa Piranha series Camera	78mm	35mm
	AZURE-ADCM42	C-mount to M42x1	45mm	9.53mm
	AZURE-ADTC	T-mount to C-mount	45mm	28.97mm
	AZURE-ADM72M42	M72x0.75 to M42x1	75mm	15.8mm
	AZURE-ADCNF	C-mount to M17x0.75	28mm	5.526mm
	AZURE-ADSC	S-mount to C-mount	27mm	/

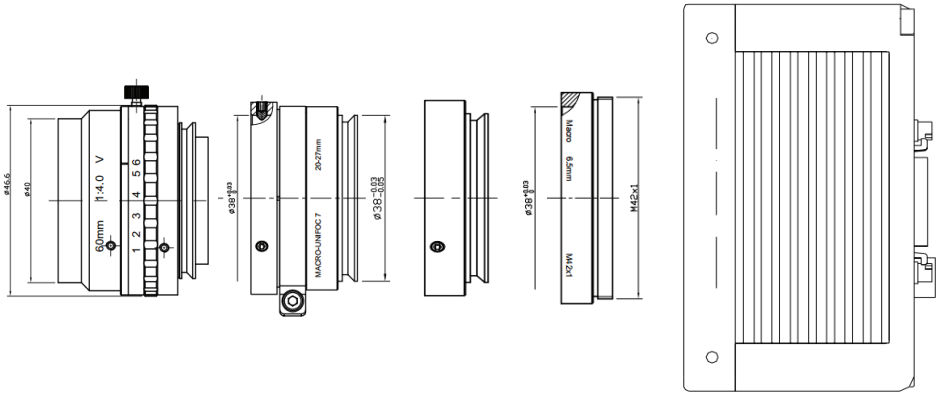

V-Mount Focus Ring Extension Tubes Camera Adapters Line Scan Camera

AZURE PHOTONICS CO.,LTD
Address:Building No.15,Haixi Hi-Tech Park,Wulongjisng Avenue, Shangjie Town,Minhou County,Fuzhou,Fujian 350108,
Website:http//www.azurephotonics.com Tel：+86-0591-83850581